GENERAL DESCRIPTION

The HP5005 series devices are a set of three terminal low power voltage detectors implemented in CMOS technology. Each voltage detector in the series detects a particular fixed voltage ranging from 0.9V to 4.2V for HP5005. The voltage detectors consist of a high-precision and low power consumption standard voltage source as well as a comparator, hysteresis circuit, and an output driver (CMOS inverter or NMOS open drain). CMOS technology ensures low power consumption. Although designed primarily as fixed voltage detectors, these devices can be used with external components to detect user specified threshold voltages.

HP5005 series are available in SOT23-3L package. Standard products are Pb-free and Halogen-free.

FEATURES

- High input voltage (up to 8V)
- Low power consumption
- Low temperature coefficient
- Built-in hysteresis characteristic
- Output voltage accuracy: tolerance ±2%
- SOT23-3L package

APPLICATIONS

- Battery checkers
- Level selectors
- Power failure detectors
- Microcomputer reset
- Battery memory backup
- Non-volatile RAM signal storage protectors

PIN ASSIGNMENT

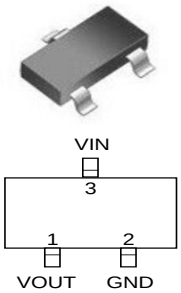

SOT23-3L
（Top View）

PIN DESCRIPTION

PIN NO	SYMBOL	I/O	DESCRIPTTION
1	VOUT	O	Output
2	GND	GND	Ground
3	VIN	Power	Input

ORDER INFORMATION

PART NO	OUTPUT	PACAKGE	MAX. VOLTAGE	TEMPERATURE	TAPE & REEL
HP5005CS3-XX	CMOS	SOT23-3L	8V	-40 ~ +85℃	3000/REEL
HP5005NS3-XX	NMOS	SOT23-3L	8V	-40 ~ +85℃	3000/REEL

Note: *XX indicates detector voltage by 0.1V step as in Selection Table. For example, 09 means the chip outputs 0.9V.*

Confidential
Released to 欣诺泰 for reference

SELECTION TABLE

PART NO	DET. VOLTAGE	HYS. WIDTH	OUTPUT	MAX. VOLTAGE
HP5005CS3-09	0.9V	4%V_{DET}	CMOS	10V
HP5005NS3-09	0.9V	4%V_{DET}	NMOS	10V
HP5005CS3-10	1.0V	4%V_{DET}	CMOS	10V
HP5005NS3-10	1.0V	4%V_{DET}	NMOS	10V
HP5005CS3-11	1.1V	4%V_{DET}	CMOS	10V
HP5005NS3-11	1.1V	4%V_{DET}	NMOS	10V
…	…	…	…	…
HP5005CS3-42	4.2V	4%V_{DET}	CMOS	10V
HP5005NS3-42	4.2V	4%V_{DET}	NMOS	10V

PART NUMBER RULES

HP5005 [1] [2] - [3]

CODE	DESCRIPTION
[1]	Output forms: C: CMOS; N: NMOS
[2]	Package: S3 - SOT23-3L
[3]	Detector voltage XX - detector voltage as in Selection Table by 0.1V step. For example, 09 means 0.9V.

MARKING DESCRIPTION:

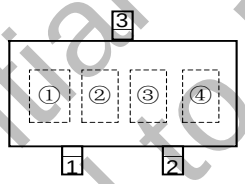

SOT23-3L
（Top View）

① Represents integer of detect voltage and

C-Chanel CMOS Output

MARK	CONFIGURATIONG	VOLTAGE(V)
A	CMOS	0.X
B	CMOS	1.X
C	CMOS	2.X
D	CMOS	3.X
E	CMOS	4.X
F	CMOS	5.X
H	CMOS	6.X

Confidential
Released to 欣诺泰 for reference

N-Channel Open Drain Output

MARK	CONFIGURATIONG	VOLTAGE(V)
K	N-ch	0.X
L	N-ch	1.X
M	N-ch	2.X
N	N-ch	3.X
P	N-ch	4.X
R	N-ch	5.X
S	N-ch	6.X

②Represents decimal number of detect voltage

MARK	VOLTAGE(V)	MARK	VOLTAGE(V)
0	X.0	5	X.5
1	X.1	6	X.6
2	X.2	7	X.7
3	X.3	8	X.8
4	X.4	9	X.9

③Represents accuracy

MARK	ACCURACY
3	2%
1	1%

④Internal Control Code.

ABSOLUTE MAXIMUM RATINGS (Note)

SYMBOL	ITEMS		VALUE	UNIT
V_{IN}	Input Voltage		-0.3~10	V
P_{DMAX}	Power Dissipation	SOT23-3L	0.3	W
$R_{\theta JA}$	Thermal Resistance	SOT23-3L	250	℃/W
T_A	Ambient Temperature		-40~85	℃
T_{STG}	Storage Temperature		-50~125	℃

Note: *Exceed these limits to damage to the device. Exposure to absolute maximum rating conditions may affect device reliability.*

RECOMMANDED OPERATING RANGE

SYMBOL	ITEMS	VALUE	UNIT
V_{IN}	Supply Voltage	0.7 to 8	V
T_{OPT}	Operating Temperature	-40 to +85	℃

Confidential
Released to 欣诺泰 for reference

ELECTRICAL CHARACTERISTICS

HP5005, V_{DF}=0.8V～4.2V, T_A=25℃

SYMBOL	ITEMS	CONDITIONS	MIN	TYP	MAX	UNIT
V_{DET}	Detection Voltage	VDF=0.8V~2.2V VDF=2.3V~5.0V	V_{DF}*0.98	V_{DF}	V_{DF}*1.02	V
V_{HYS}	Hysteresis Width	-	0.02* V_{DET}	0.04* V_{DET}	0.08* V_{DET}	V
I_{IN}	Operating Current	V_{IN}=1.5V	-	0.7	2.3	μA
		V_{IN}=2.0V	-	0.8	2.7	
		V_{IN}=3.0V	-	0.9	3.0	
		V_{IN}=4.0V	-	1.0	3.2	
		V_{IN}=5.0V	-	1.1	3.6	
V_{IN}	Operating Voltage	-	0.7	-	8	V
I_{OL}	Output Sink Current	V_{IN}=2V, V_{OUT}=0.2V	0.5	1	-	mA
$\frac{\Delta V_{DET}}{V_{DF}\Delta T_a}$	Temperature Coefficient	-25℃ <T_A<125℃	-	±100	-	ppm/℃

SIMPLIFIED BLOCK DIAGRAM

1）CMOS Output

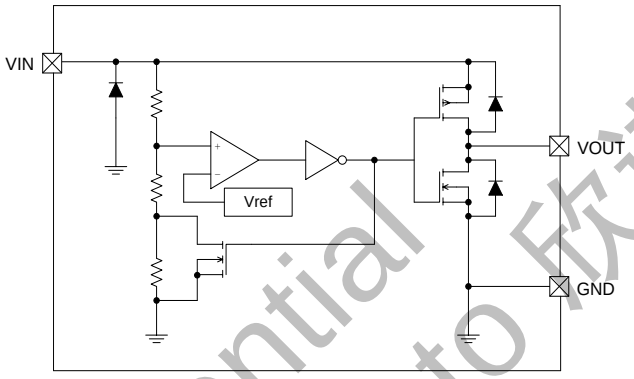

2）N-ch Open Drain Output

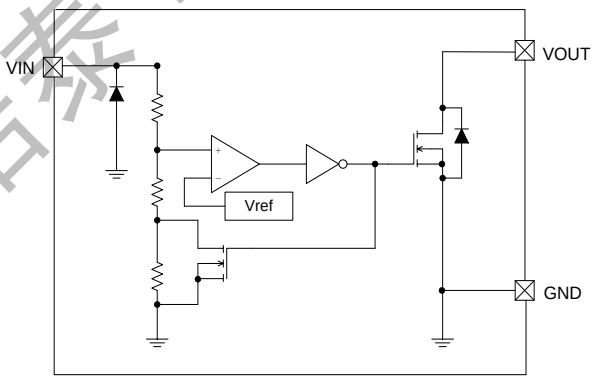

OUTPUT TABLE & CURVE

V_{DD}	V_{DD} > V_{DET}(+)	V_{DD}≤V_{DET}(-)	Output type
V_{OUT}	Hi-Z	V_{SS}	N-ch
V_{OUT}	V_{IN}	V_{SS}	CMOS

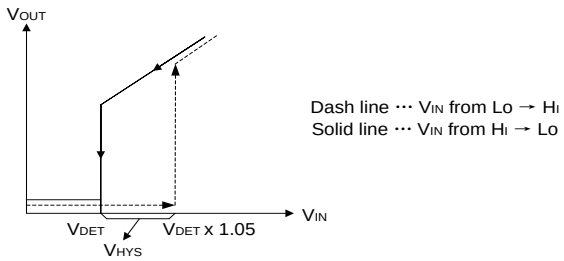

Confidential
Released to 欣诺泰 for reference

TYPICAL PERFORMANCE CHARACTERISTICS

(1) Output Voltage vs Input voltage

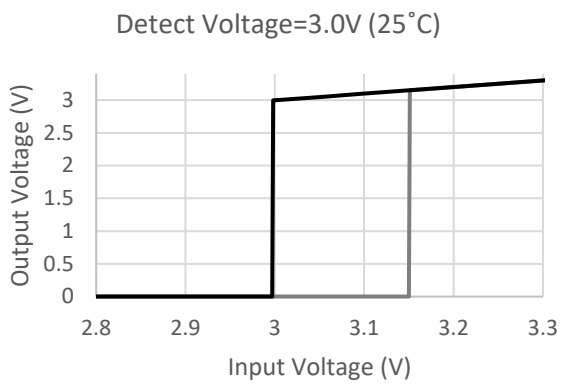

(2) Supply Current vs. Input Voltage

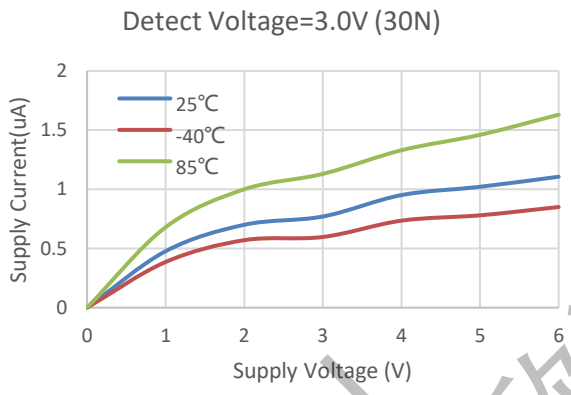

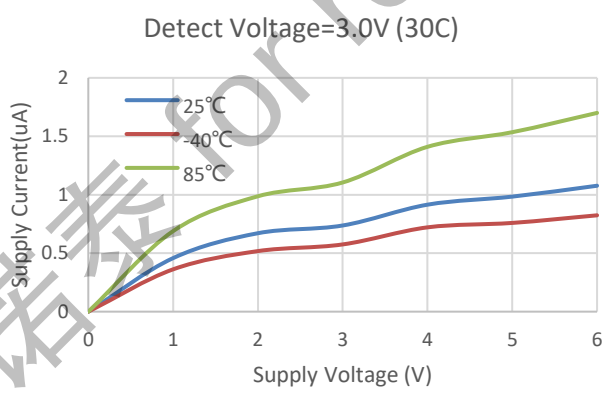

(3) Detect, Release Voltage vs. Ambient Temperature

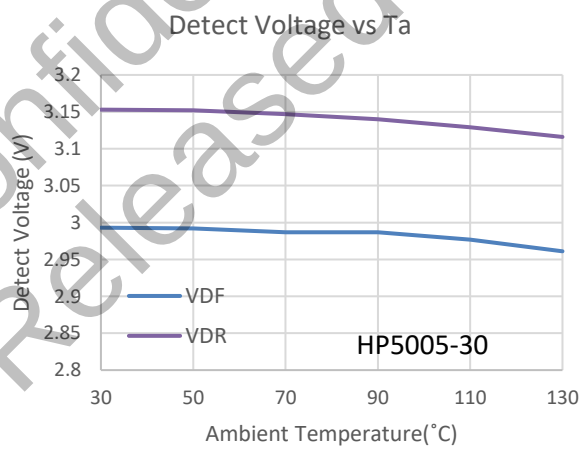

Confidential
Released to 欣诺表 for reference

APPLICATION INFORMATION

Microcomputer Reset Circuit

Normally a reset circuit is required to protect the microcomputer system from malfunctions due to power line interruptions. The following examples show how different output configurations perform a reset function in various systems.

NMOS open drain output application for separate power supply

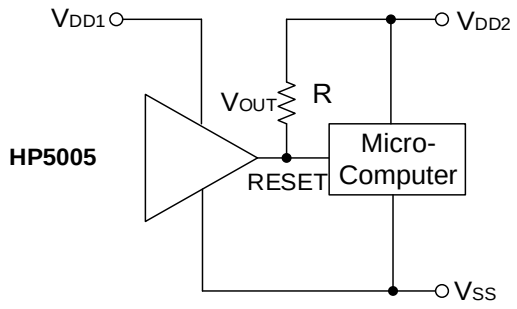

NMOS open drain output application with R-C delay

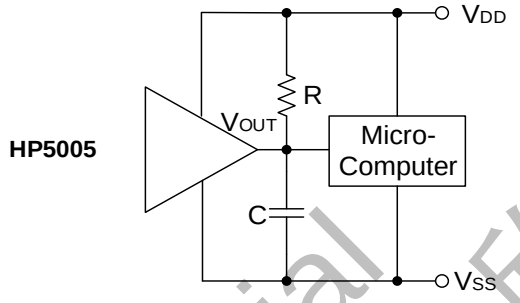

Power-on Reset Circuit

With several external components, the NMOS open drain type of the HP5005S3xxN series can be used to perform a power-on reset function as shown:

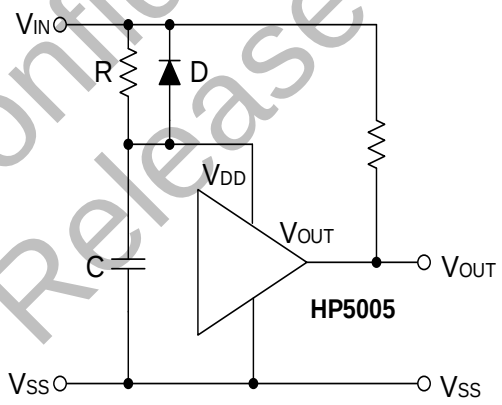

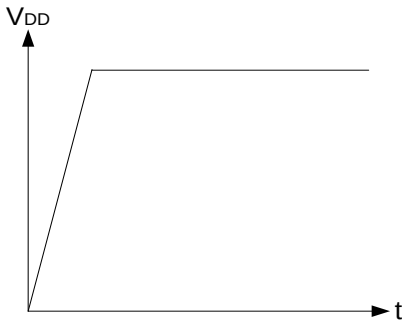

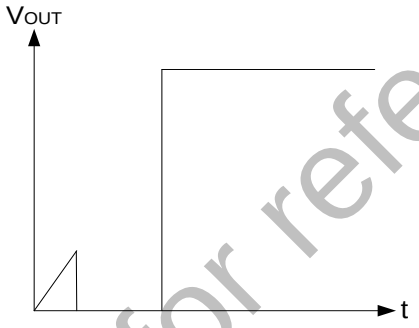

5V Power Line Monitoring Circuit

Generally, a minimum operating voltage of 4.5V is guaranteed in a 5V power line system.

5V power line monitor with power-on reset

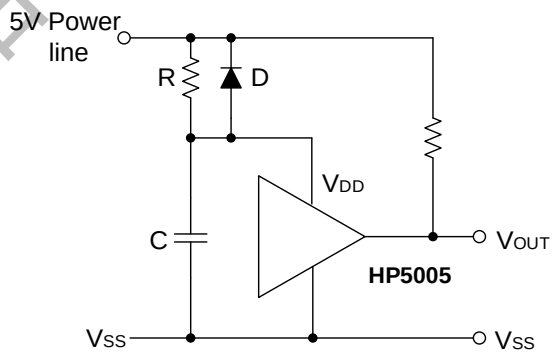

With 5V voltage regulator

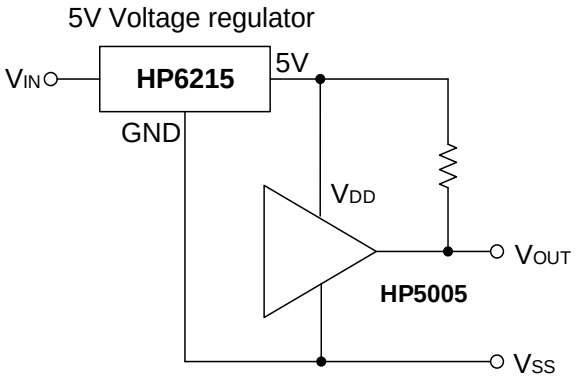

Confidential
Released to 欣诺泰 for reference

Change of Detectable Voltage

If the required voltage is not found in the standard product selection table, it is possible to change it by using external resistance dividers or diodes.

Varying the detectable voltage with a resistance divider

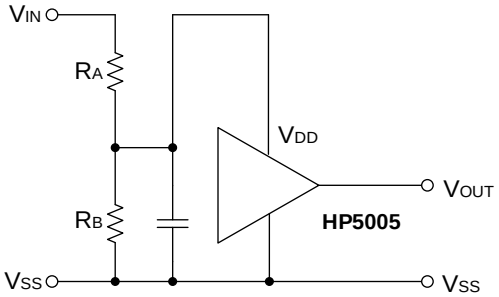

$$\text{Detectable voltage} = \frac{R_A+R_B}{R_B} \times V_{DET}$$

$$\text{Hysteresis width} = \frac{R_A+R_B}{R_B} \times V_{HYS}$$

Varying the detectable voltage with a diode

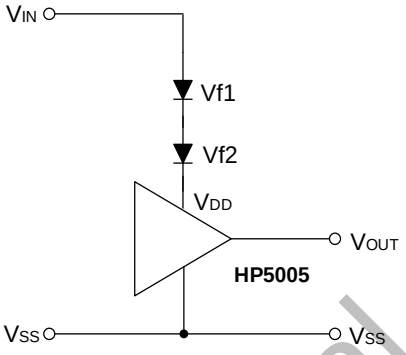

$$\text{Detectable Voltage} = V_{f1} + V_{f2} + V_{DET}$$

Malfunction Analysis

The following circuit demonstrates the way a circuit analyzes malfunctions by monitoring the variation or spike noise of power supply voltage.

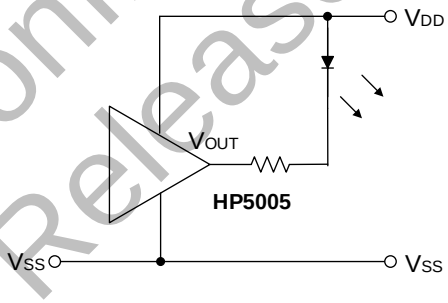

Charge Monitoring Circuit

The following circuit shows a charged monitor for protection against battery deterioration by overcharging. When the voltage of the battery is higher than the set detectable voltage, the transistor turns onto bypass the charge current, protecting the battery from overcharging.

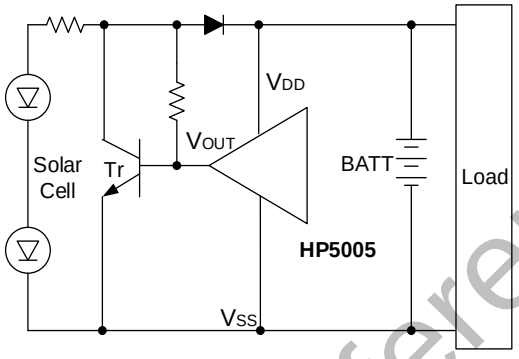

Level Selector

The following diagram illustrates a logic level selector.

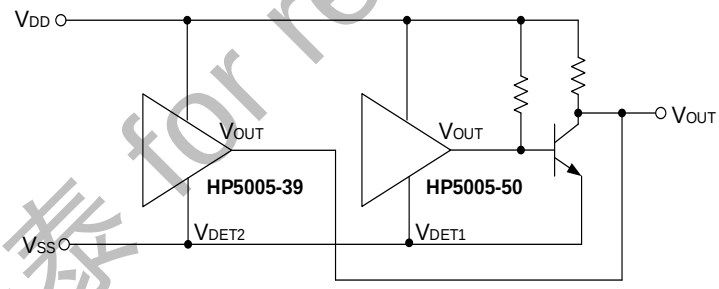

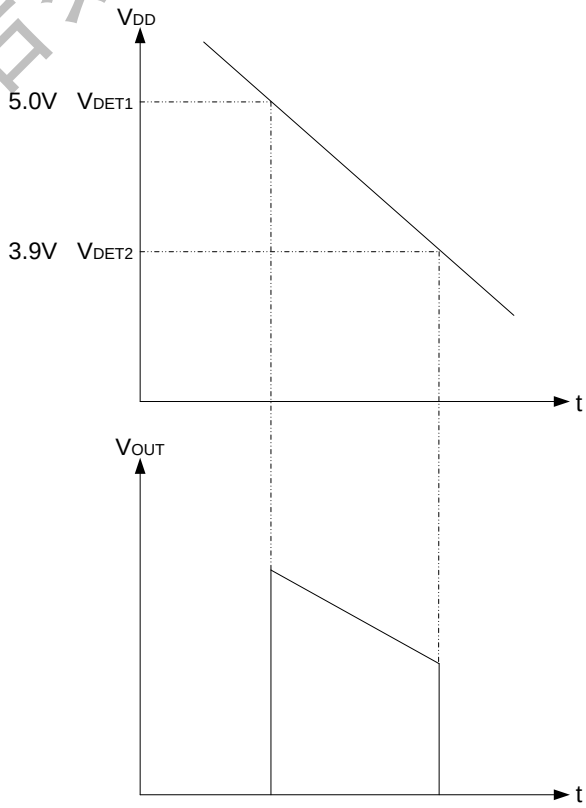

Confidential
Released to 欣诺泰 for reference

PACKAGE OUTLINE

Package	SOT23-3L	Devices per reel	3000pcs	Unit	mm

Package Dimension：

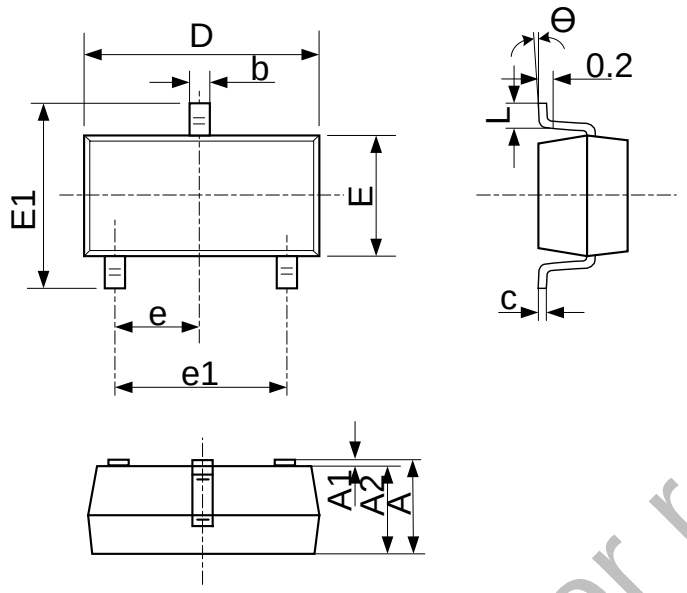

Symbol	Dimensions In Millimeters		Dimensions In Inches	
	Min	Max	Min	Max
A	1.050	1.250	0.041	0.049
A1	0.000	0.100	0.000	0.004
A2	1.050	1.150	0.041	0.045
b	0.300	0.500	0.012	0.020
c	0.100	0.200	0.004	0.008
D	2.820	3.020	0.111	0.119
E	1.500	1.700	0.059	0.067
E1	2.650	2.950	0.104	0.116
e	0.950(BSC)		0.037(BSC)	
e1	1.800	2.000	0.071	0.079
L	0.300	0.600	0.012	0.024
θ	0℃	8℃	0℃	8℃

Confidential
Released to 欣诺泰 for reference

REVISION HISTORY

Version No.	Date	Description
Preliminary	2017-06-27	- Initial preliminary release
V 0.1	2018-05-05	- Change part number according to updated naming rule
V 0.2	2018-05-30	- Add part with 15V input voltage, and change the part number rules
V 0.3	2018-10-31	- Update Order Information & Selection Table
V 0.4	2018-08-01	- Update Selection Table
V 0.5	2019-02-01	- Update Mark Description
V 0.6	2019-05-15	- Update Electrical Characteristics
V 0.7	2021-03-19	- Delete HP5005M and update part number

Confidential
Released to 欣诺泰 for reference